Ulti-Mate Nano Strip

Dual Row Hermaphroditic Connectors

Winchester Interconnect Micro offers Nano Strip Dual Row Hermaphroditic Connectors, designed for compact, high-reliability interconnect applications. These polarized dual-row wired connectors provide flexibility in mating configurations and are available in 8 to 80 positions. As a QPL-qualified supplier for MIL-DTL-32139, Winchester ensures dependable electrical and mechanical performance even in demanding environments.

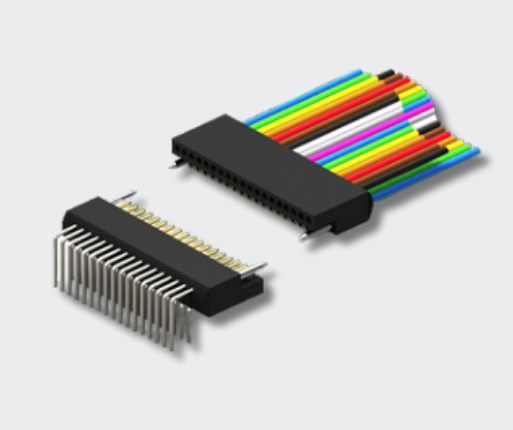

KEY FEATURES & BENEFITS

- Wide Contact Range – Available in configurations from 8 to 80 positions for design versatility.
- Reliable Electrical Performance – Contact resistance of 33 milliohms max (contact only) and 87 milliohms max (with 6" wire at 1A).
- Current Rating – Supports up to 1A maximum.
- High Dielectric Strength – Withstands 250 VAC at sea level and 100 VAC at 70,000 feet.
- Strong Insulation Resistance – 100 VDC and 5000 Megohms minimum.
- Smooth Mating and Unmating – Engaging force of 5 oz max, separation force of 0.4 oz min, and mating/unmating force of 7 oz × number of contacts max.
- QPL Certified – Meets MIL-DTL-32139 standards for proven nano connector performance.

Winchester Interconnect

DIMENSIONAL

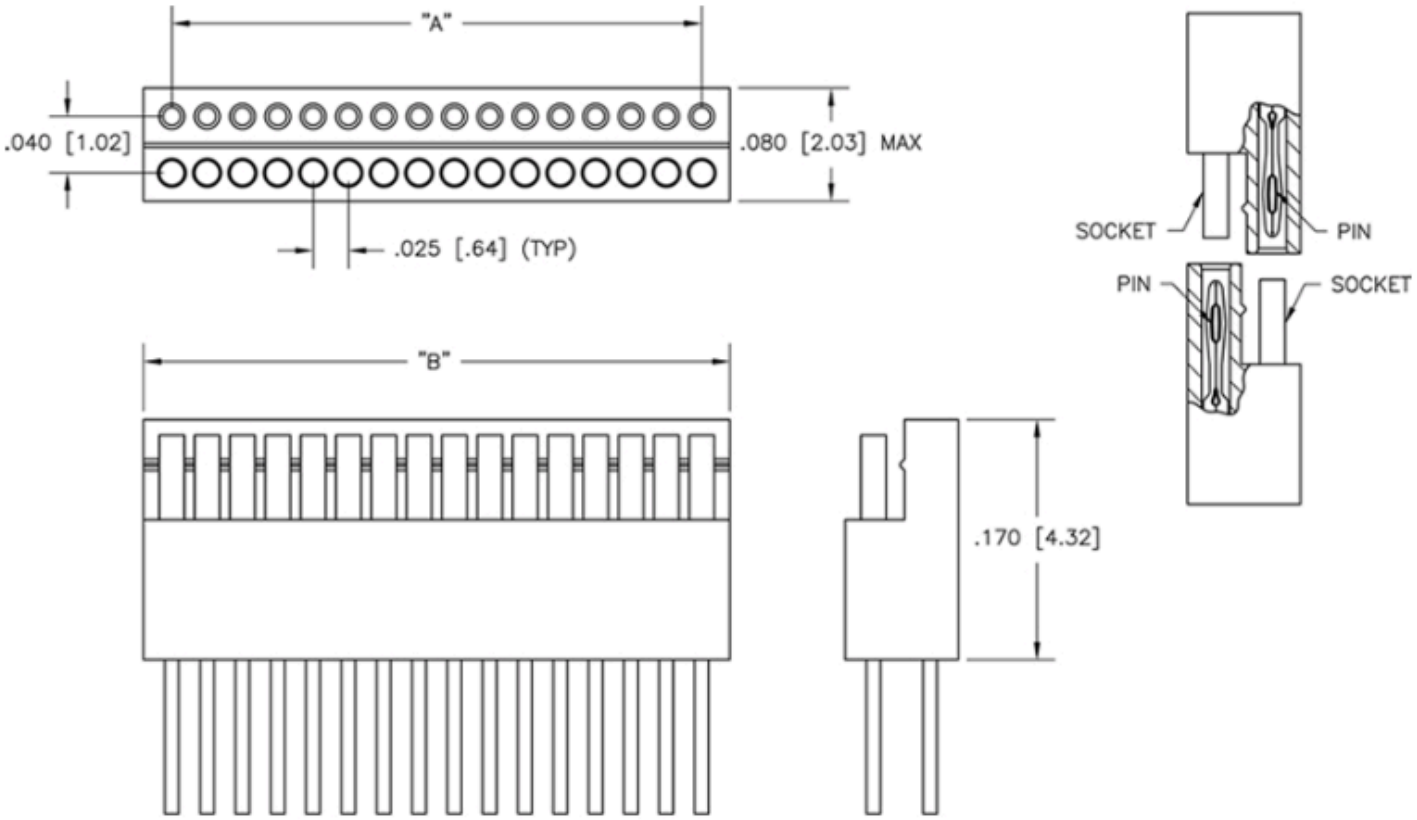

A = (NO. OF POSITIONS IN SINGLE ROW -1) X .025 [.64] 1ST TO LAST CONTACT

B = A + .050 [1.27] = OVERALL

CONSULT FACTORY FOR DIMENSIONS ON LENGTHS LESS THAN 80 POSITIONS

Winchester Interconnect

PERFORMANCE

Electrical Properties	
Contact Resistance	33 milliohm max contact only and 87 milliohms max with 6" wire @ 1A
Current Rating	1A max.
Dielectric WithStanding Voltage	250 VAC at sea level, 100 VAC at 70,000 feet. 1mA leakage current max.
Insulation Resistance	100 VDC and 5000 Megohms min.

Mechanical Properties	
Engaging Force	5 oz max.
Separation Force	.4 oz min.
Mating/Unmating Force	7 oz x # of contacts max.
Vibration	EIA-364-28 Condition IV, 1 microsecond max discontinuity
Shock	EIA-364-27 Condition G, 1 microsecond max discontinuity
Durability	EIA-364-09, 200 matings, passes Mating Force, CR, Eng and Sep Forces
Salt Spray	EIA 364-26 Condition B-48 hours

HARDWARE

Type 02

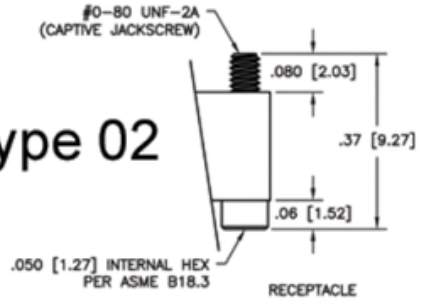

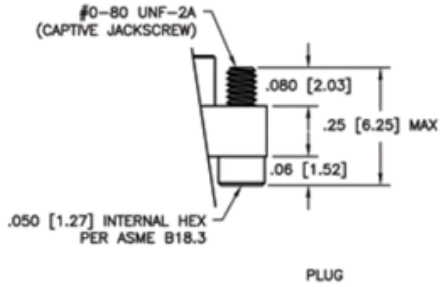

Type 01

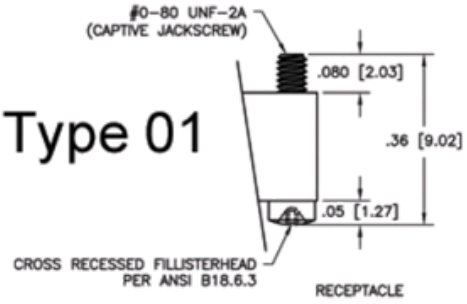

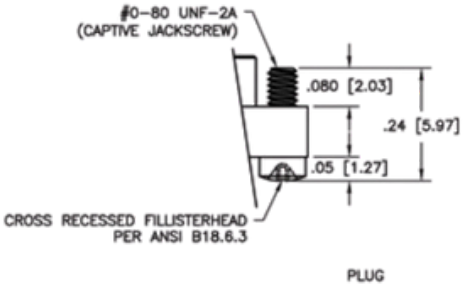

Type 03

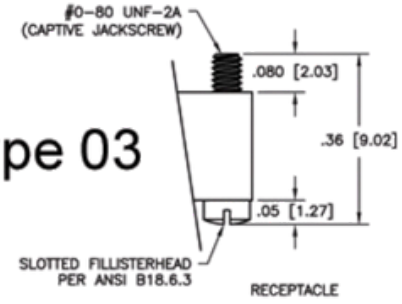

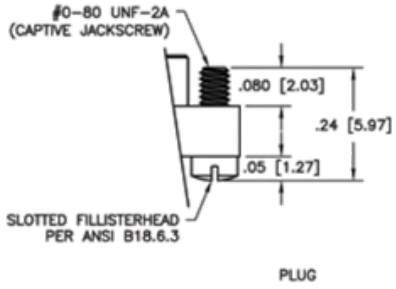

Type 07

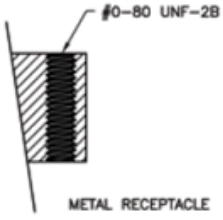

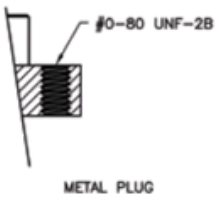

Type 07

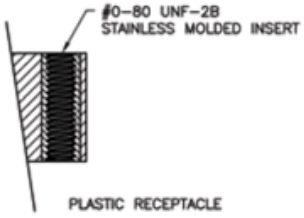

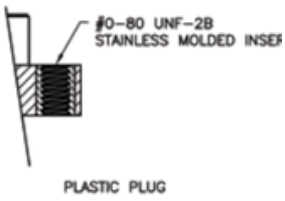

MATERIALS

Materials and Finishes	
Signal Pin Contacts	C17200 Beryllium Copper per ASTM B194 or C17410 Beryllium Copper per ASTM B768
Signal Socket Contacts	C26000 Brass Alloy per ASTM B135 or C17410 Beryllium Copper per ASTM B768
Contact Plating	Gold Plating per ASTM B488
PC Tails	Copper Wire per A-A-59551 Type S or C17410 Beryllium Copper per ASTM B768
PC Tail Plating	Tin plating per ASTM B545, or 60/40 Tin/Lead plating per SAE-AMS-P-81728, or Gold plating per ASTM B488
Insulator Material	LCP(Liquid Crystal Polymer) GLCP-30F or PPS per MIL-M-24519 GST-40F
Hardware	300 Series Stainless Steel per ASTM A 582/A582 or ASTM A 581/A581M, Passivated per SAE AMS-2700

HOW TO ORDER

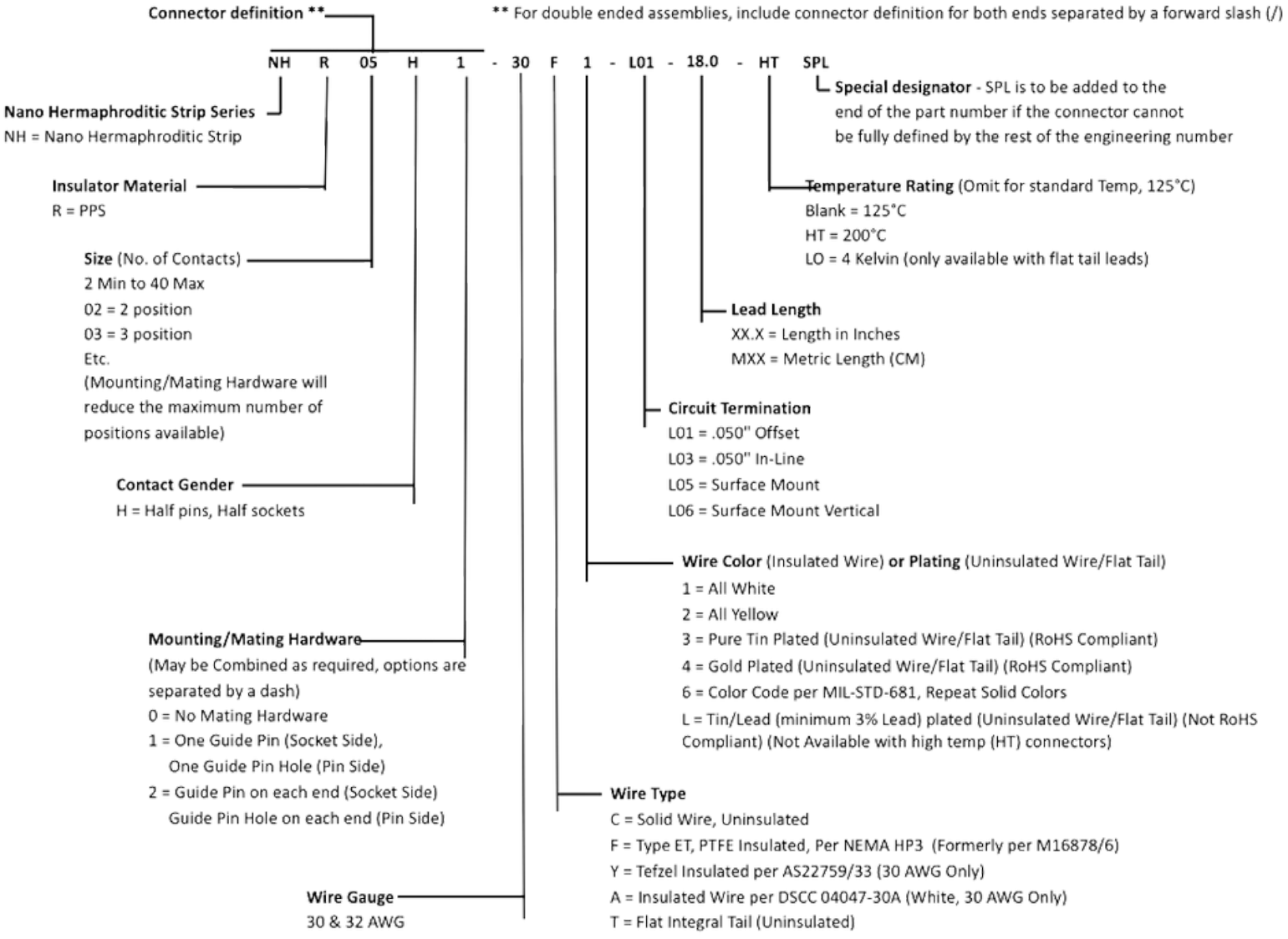

Winchester Interconnect